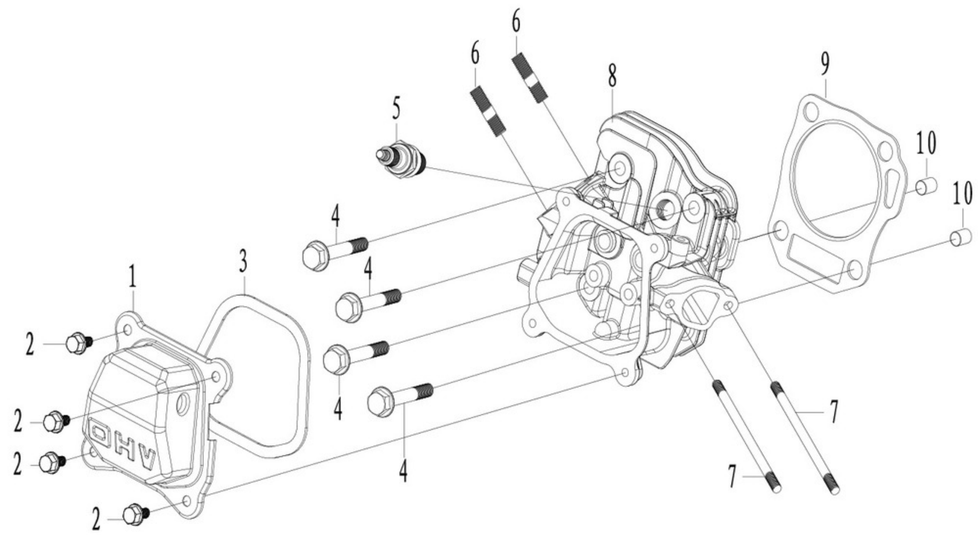

Lp	Kod	Nazwa	168FB-2/P	170F-2/P
1	1201400017-0003	HEAD COVER	1	1
2	360300005	BOLT GB/T5789 M6×12	4	4
3	1202000007-0001	GASKET, HEAD COVER	1	1
4	360300130	BOLT GB/T5789 M8×60	4	4
5	2204700002-0001	PLUG, SPARK F7TC	1	1
6	1909300003-0002	BOLT, STUD, M8×35	1	1
7	1909200001-0001	BOLT, STUD, M6×113	1	1
8	1200200014-0002	CYLINDER HEAD ASSY	1	
	1200200015-0002	CYLINDER HEAD ASSY		1
9	1200800035-0001	GASKET, CYLINDER HEAD	1	
9	1200800037-0001	GASKET, CYLINDER HEAD		1
10	3411200001-0002	PIN, DOWEL ϕ10×16	2	2

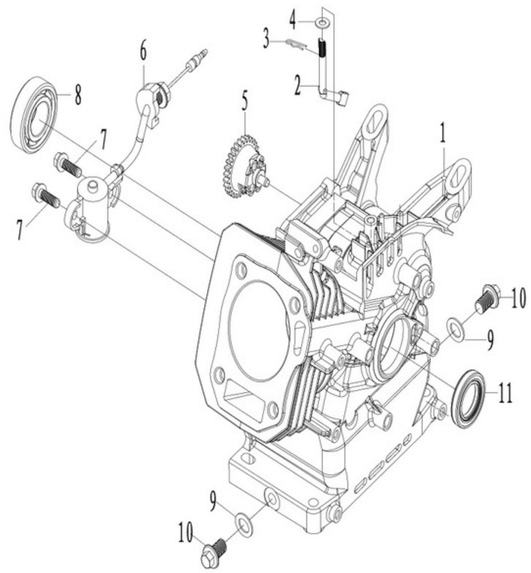

Lp	Kod	Nazwa	168FB-2/P	170F-2/P
1	1100300068-0001	CRANKCASE COMP	1	
	1100300013-0001	CRANKCASE COMP		1
2	1702100003-0001	GOVERNOR ARM SHAFT	1	1
3	3410000003-0001	LOCKER,GOVERNOR ARM SHAFT	1	1
4	3412100024-0002	PLAIN WASHER ϕ6×ϕ13×1	1	1
5	1701200004-0001	GOVERNOR KIT	1	1
6	2300100003-0002	OIL SENSOR	1	1
7	360300007	BOLT M6×16	2	2
8	360720036	BEARING 6205	1	1
9	3412100041-0001	PLAIN WASHER ϕ10×ϕ15×2	2	2
10	360290002	BOLT, DRAIN PLUG M10×1.25×15	2	2
11	360800010	OIL SEALϕ25×ϕ41.25×6	1	1

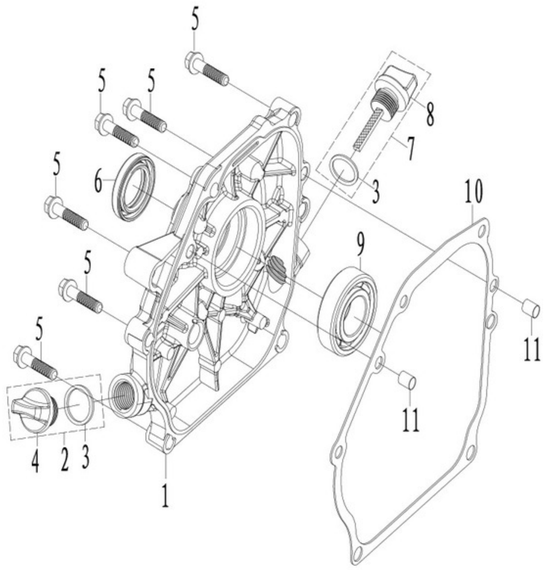

Lp	Kod	Nazwa	168FB-2/P	170F-2/P
1	1101000006-0003	COVER, CRANKCASE	1	1
2	1102200005-0002	OIL FILLER PLUG ASSY	1	1
3	3416100001	DIPSTICK SEALING RING	1	1
4	1102300001-0002	OIL FILLER PLUG	2	2
5	360300205	BOLT M8×32	6	6
6	360800010	OIL SEAL	1	1
7	1101500002-0003	DIPSTICK ASSY	1	1
8	1104700007-0001	DIPSTICK	1	1
9	360720036	BEARING GB/T276/6205	1	1
10	1101400005-0001	GASKET, CASE COVER	1	1
11	3411200003-0002	PIN, DOWEL, ϕ8×14	2	2

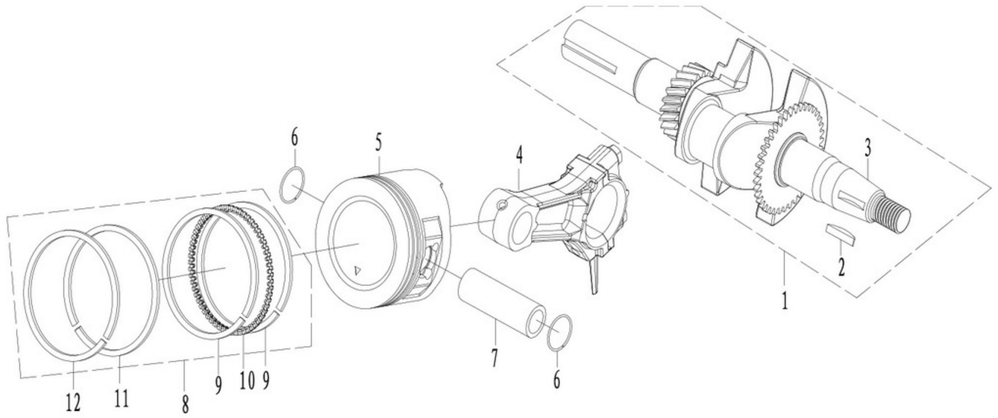

Lp	Kod	Nazwa	168FB-2/P	170F-2/P
1	1302000018-0000	CRANK SHAFT ASSY	1	
	1302000051-0000	CRANK SHAFT ASSY		1
2	3412500001-0001	SPECIAL WOODRUFF KEY	1	1
3	1302100077-0001	CRANK SHAFT	1	
	1302100076-0001	CRANK SHAFT		1
4	1301400004-0001	CONNECTING ROD ASSY	1	
	1301400006-0001	CONNECTING ROD ASSY		1
5	1300300004-0001	PISTON	1	
	1300300005-0001	PISTON		1
6	1301300004-0001	CLIP, PISTON PIN	2	2
7	1301200003-0001	PIN, PISTON	1	1
8	1300500003-0001	PISTON RING ASSY	1	
	1300500006-0001	PISTON RING ASSY		1
9	1301100001-0001	FILM LOOP	1	
	1301100008-0001	FILM LOOP		1
10	1300900001-0001	BUSH RING	1	
	1300900008-0001	BUSH RING		1
11	1300700001-0001	GAS RING TWO	1	
	1300700024-0001	GAS RING TWO		1
12	1300600001-0001	GAS RING ONE	1	
12	1300600020-0001	GAS RING ONE		1

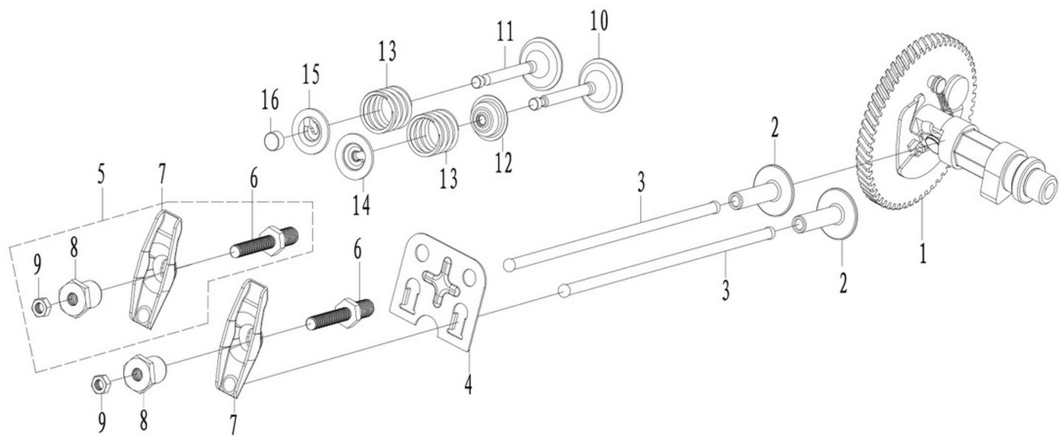

Lp	Kod	Nazwa	168FB-2/P	170F-2/P
1	1400100008-0001	CAMSHAFT ASSY	1	
	1400100008-0001	CAMSHAFT ASSY		1
2	1403400004-0001	LIFTER, VALVE	2	
	1403400004-0001	LIFTER, VALVE		2
3	1401100002-0001	ROD, PUSH	2	2
4	1401500001-0001	PLATE, PUSH ROD GUIDE	1	1
5	1401900002-0001	ARM ASSY, VALVE ROCKER	2	2
6	1402400001-0001	BOLT, PIVOT	2	2
7	1402000004-0001	ARM, VALVE ROCKER	2	2
8	1402500001-0001	ADJUSTING NUT , VALVE	2	2
9	1403700001-0001	NUTT, PIVOT LOCKING	2	2
10	1401700003-0001	VALVE, INLET	1	1
11	1401800004-0001	VALVE, EXHAUST	1	
	1401800005-0001	VALVE, EXHAUST		1
12	1200900003-0001	VALVE SEAL	1	1
13	1402700003-0001	SPRING, VALVE	2	2
14	1402800003-0002	INTAKE VALVE SPRING SEAT	1	1
15	1403800001-0001	EXHAUST VALVE SPRING SEAT	1	1
16	1403300002-0002	ADJUSTER, EX. VALVE	1	1

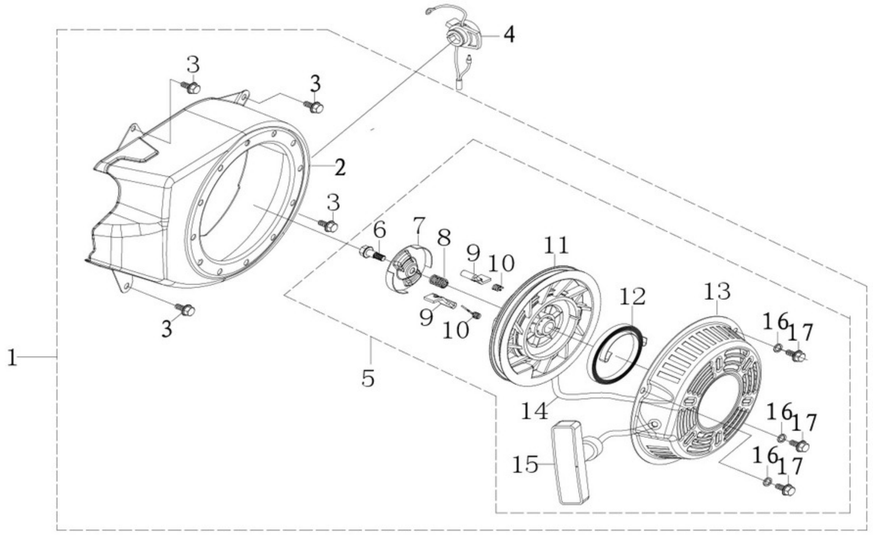

Lp	Kod	Nazwa	168FB-2/P	170F-2/P
1	2000100007-0003	RECOIL STARTER ASSY	1	1
2	1600100042-0004	WIND SCOOPER	1	1
3	360220079	BOLT GB/T16674.1/M6*12	4	4
4	2205000001-0001	SWITH ASSY,ENGINE STOP	1	1
5	2000200010-0002	STARTER COMP, RECOIL	1	1
6	2000500001-0001	CENTER POSITION BOLT	1	1
7	2000600001-0001	RATCHET, GUIDE	1	1
8	2000700001-0001	CENTER POSITION SPRING	1	1
9	2000800003-0001	RATCHET, STARTER	2	2
10	2000900001-0001	SPRING, RETURN	2	2
11	2001000001-0001	REEL, RECOIL STARTER	1	1
12	2001200003-0001	SPRING, STARTER RETURN	1	1
13	2000300014-0001	STARTER COVER COMP , RECOIL	1	1
14	2001300001-0001	ROPE, RECOIL STARTER	1	1
15	2001400003-0001	HANDLE, STARTER	1	1
16	360630007	RECOIL STARTER ASSY 6	3	3
17	360220002	BOLT M6×10	3	3

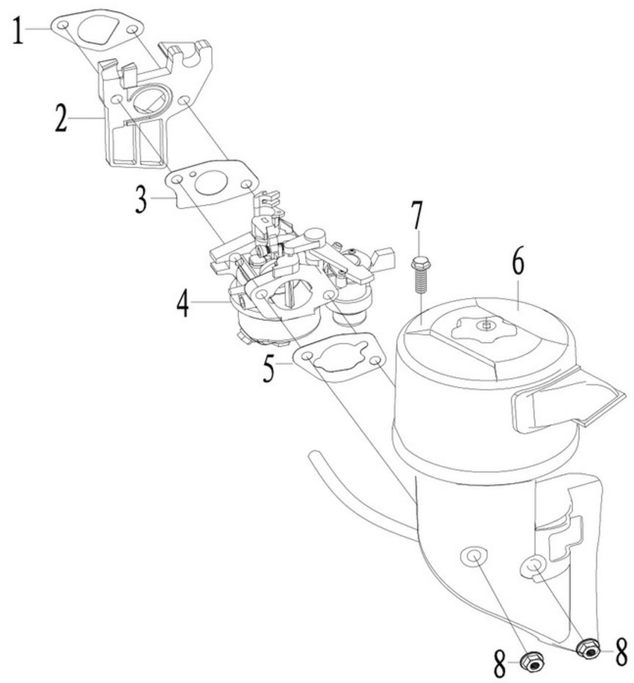

Lp	Kod	Nazwa	168FB-2/P	170F-2/P
1	1900100017-0001	AIR INTAKE WASHER	1	1
2	1900300005-0001	INSULATOR	1	1
3	1900200005-0001	PACKING, CARBURETOR	1	1
4	1807900007-0001	CARBURETOR	1	
	1807900089-0001	CARBURETOR		1
5	1901000010-0001	GASKET, AIR CLEANER	1	1
6	1901100025-0001	AIR CLEANER ASSY	1	1
7	360300047	BOLT GB/T5789/M6*22	1	1
8	360040004	NUT GB/T6177/M6	2	2

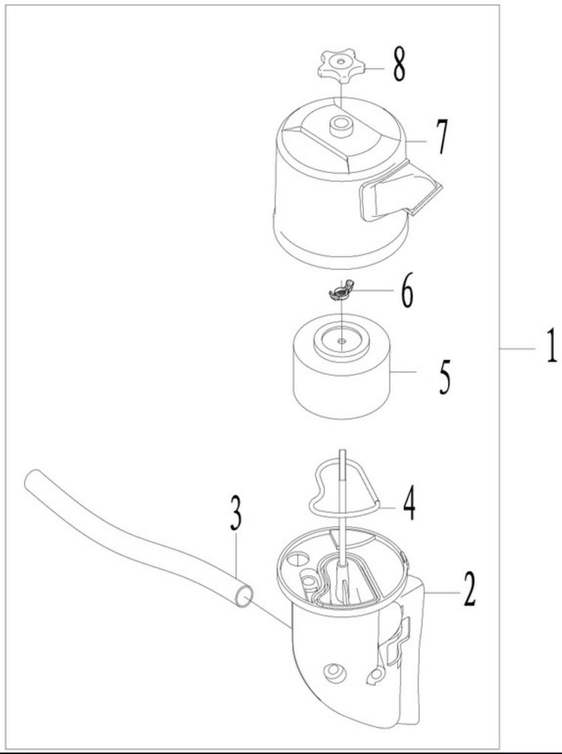

Lp	Kod	Nazwa	168FB-2/P	170F-2/P
1	1901100025-0001	AIR CLEANER ASSY	1	1
2	1902400010-0001	AIR CLEANER CASE	1	1
3	1203500012-0001	WASTE GAS PIPE	1	1
4	1902100002-0001	PACKING	1	1
5	1903700017-0001	SPENGE ELEMENT, AIR CLEANER	1	1
6	360100003	BUTTERFLY NUT	1	1
7	1901300003-0002	COVER,AIR CLEANER	1	1

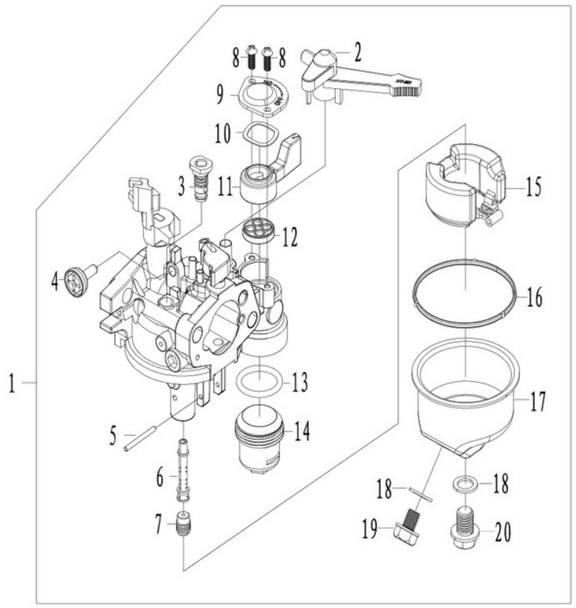

Lp	Kod	Nazwa	168FB-2/P	170F-2/P
1	1807900007-0001	CARBURETOR	1	
	1807900089-0001	CARBURETOR		1
2	1808500006-0001	CHOKE PLATE HANDLE	1	1
3	1808900001-0001	IDLE HOLE COMPONENT	1	1
4	1808800002-0001	JET SET, PILOT	1	1
5	1809400001-0001	PIN	1	1
6	1809500003-0001	NOZZLE, MAIN	1	
	1809500001-0001	NOZZLE, MAIN		1
7	1809600005-0001	JET, MAIN	1	
	1809600001-0001	JET, MAIN		1
9	1811200001-0001	FUEL SWITCH COVER PLATE	1	1
10	1811400004-0001	WASHER	1	1
11	1811300002-0001	FUEL SWITCH HANDLE	1	1
12	1811400004-0001	FUEL SWITCH SEAL	1	1
13	1905300004-0001	SEDIMENT BOWL SEAL	1	1
14	1811500001-0001	SEDIMENT BOWL	1	1
15	1809300002-0001	FLOAT SET	1	1
16	1905400002-0001	CHAMBER SET,FLOAT	1	1
17	1809700001-0001	WASHER	1	1
18	1808000001-0001	GASKET	2	2
19	3403900008-0001	BOLT, DRAIN PLUG	1	1
20	1811000001-0001	BOLT	1	1

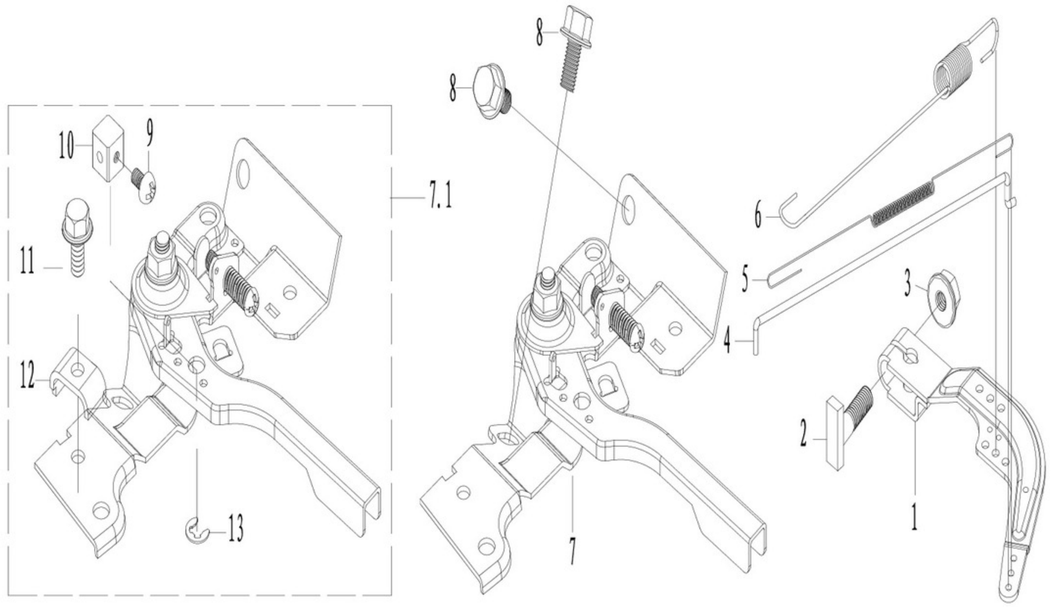

Lp	Kod	Nazwa	168FB-2/P	170F-2/P
1	1702000003-0001	ARM, GOVERNOR	1	1
2	3410500002-0001	T-SHAPE BOLT	1	1
3	360040004	NUT M6	1	1
4	1701700006-0001	TIE ROD	1	1
5	1701800003-0001	FINE ADJUSTMENT SPRING	1	1
6	1701900004-0001	GOVERNING SPRING	1	1
7	1700100011-0001	CONTROL ASSY	1	1
7,1	1700100032-0001	CONTROL ASSY	1	1
8	360300004	BOLT M6×12	2	2
9	360410057	SCREW M4×6	1	1
10	1700800004-0001	WIRE TERMINAL	1	1
11	360330002	BOLT M5×16	1	1
12	1700900001-0001	PRESS LINE BOARD	1	1
13	360940002	SPLIT WASHER	1	1

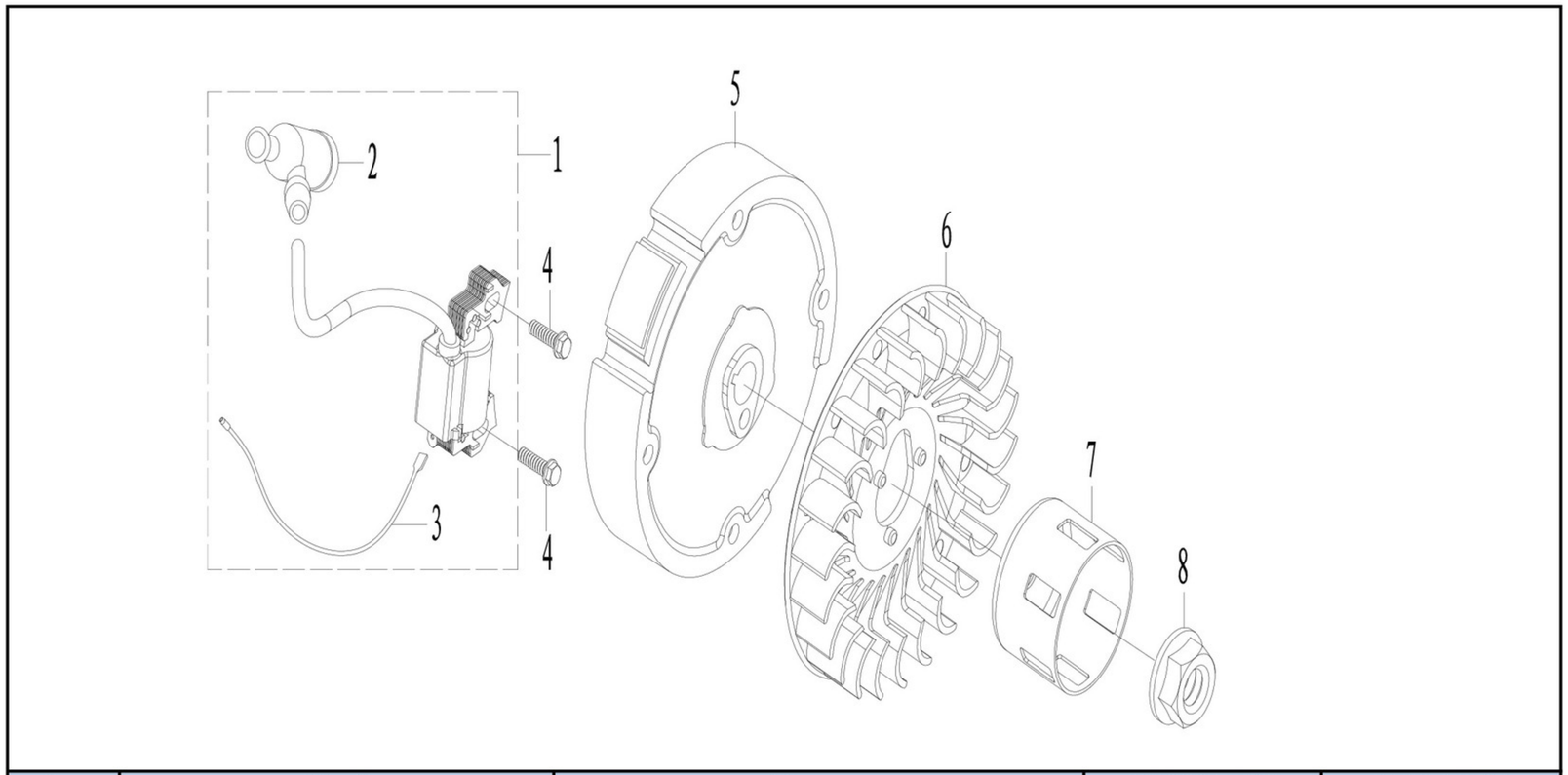

Lp	Kod	Nazwa	168FB-2/P	170F-2/P
1	2204100008-0001	IGNITION	1	1
2	2204600002-0001	CAP,IGNITION	1	1
3	2204500005-0001	CORD,STOP SWITCH	1	1
4	360300047	BOLT M6×22	1	1
5	1303000006-0001	FLYWEEL	1	1
6	1601200005-0001	FAN, COOLING	1	1
7	2001900003-0002	PULLEY, STARTER	1	1
8	360050006	NUT M14×1.5	2	2

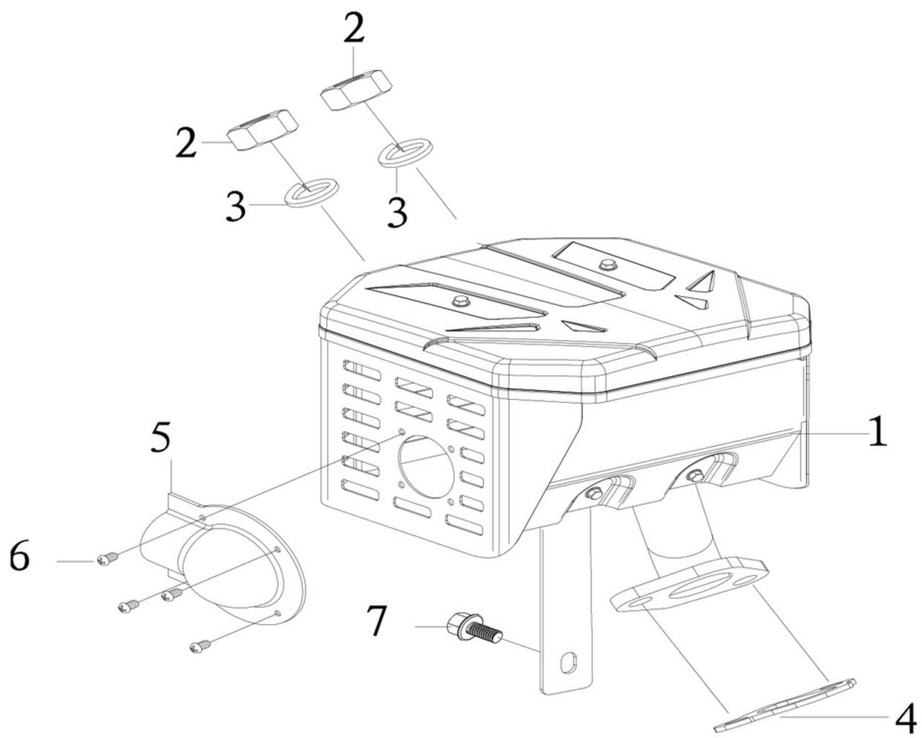

Lp	Kod	Nazwa	168FB-2/P	170F-2/P
1	1906300017-0001	MUFFLER COMP	1	1
2	360010003	NUT M8	2	2
3	360620008	SPRING WASHER 8	2	2
4	1906100003-0001	AIR EXHAUST WASHER	1	1
5	1908500001-0001	GUIDING COVER	1	1
6	360450005	SCREW ST4.2×5	4	4
7	360300005	BOLT M6×12	1	1

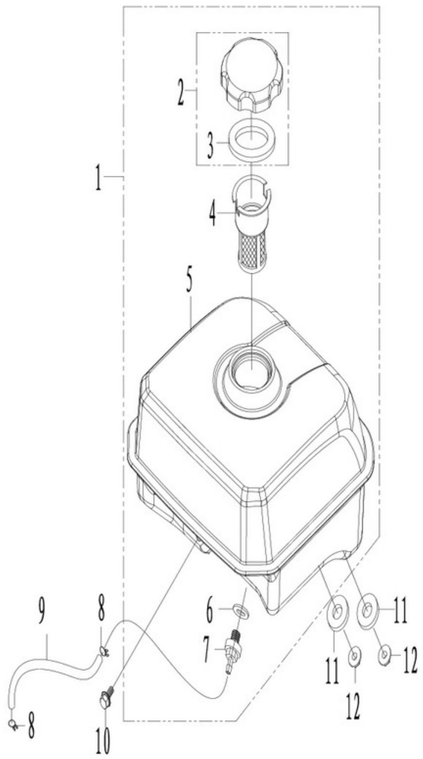

Lp	Kod	Nazwa	168FB-2/P	170F-2/P
1	1800100041-0001	TANK FUEL COMP.	1	1
2	1800900017-0001	CAP COMP,FUEL FILLER	1	1
3	1801200001-0001	PACKING,FUEL FILLER	1	1
4	1801800001-0001	FILTER FUEL	1	1
5	1800200051-0001	FUEL TANK	1	1
6	1801200001-0001	PACKING	1	1
7	1801900001-0001	JOINT,FUEL TANK	1	1
8	3413300002-0001	CLIP,TUBE	2	2
9	1816300040-0001	TUBE,FUEL	1	1
10	360220029	BOLT M6×30	1	1
11	1802500001-0001	WASHER,	1	1
12	360040008	NUT M6	1	1

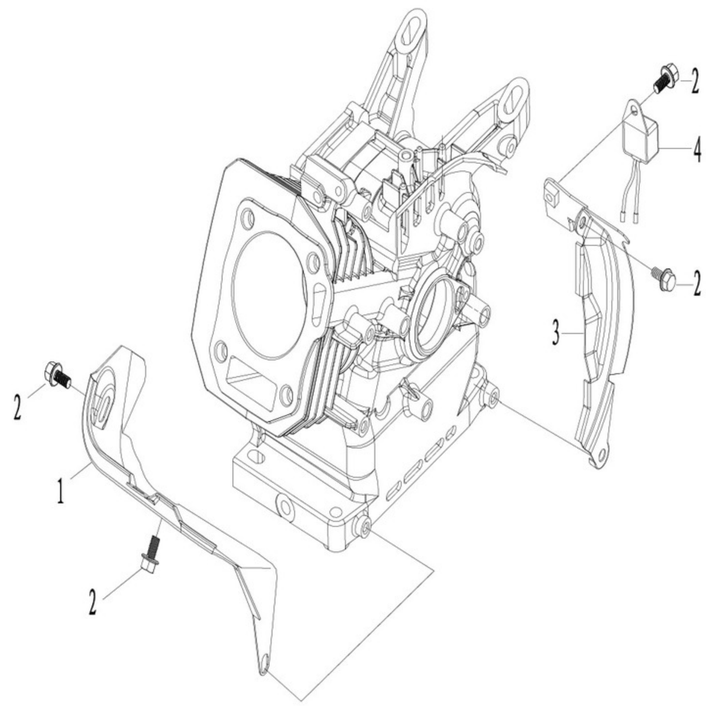

Lp	Kod	Nazwa	168FB-2/P	170F-2/P
1	1600600023-0001	WINDSHIELD	1	1
2	360300005	BOLT M6×12	4	4
3	1601100008-0001	SHROUD COMP	1	1
4	2300300001-0001	BREAKER, PROTECTIVE	1	1

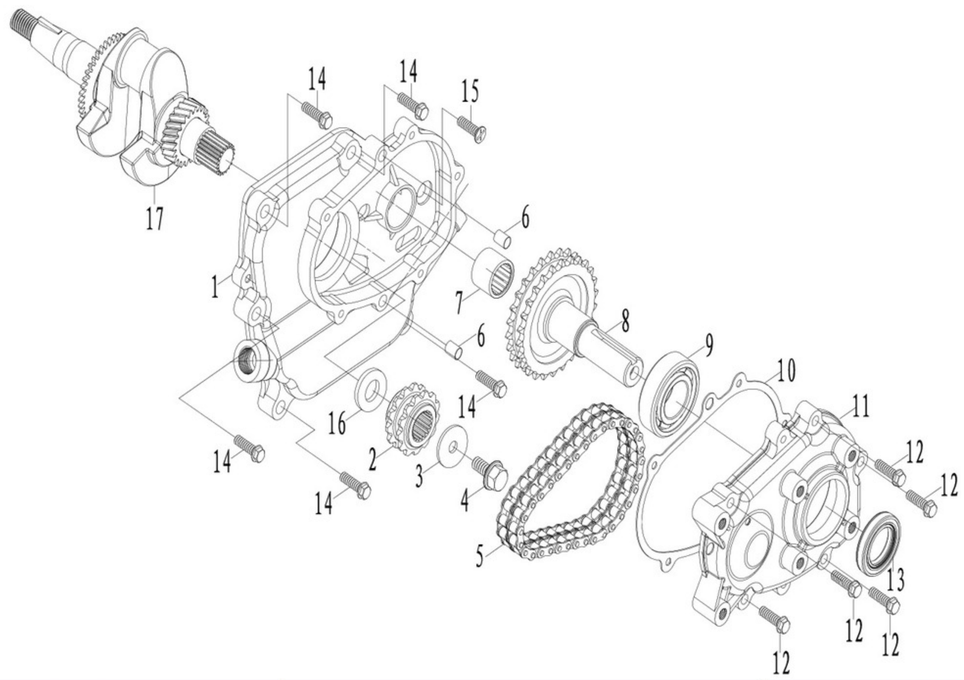

Lp	Kod	Nazwa	168FB-2/P	170F-2/P
1	1101000006-0003	CRANKCASE COVER ASSY	1	1
2	2100300013-0001	DRIVE SPROCKET WHEEL	1	1
3	3412100003-0001	WASHERϕ8×ϕ28×3	1	1
4	360250029	BOLT M8×30	1	1
5	2100200025-0001	CHAIN COMP 06B-2×34L	1	1
6	3411200003-0001	PIN,DOWEL ϕ8×14	2	2
7	360730008	BEARING HK2016	1	1
8	2100100003-0001	DRIVEN SPROCKET WHEEL	1	1
9	360720036	BEARING 6205/P6	1	1
10	2100800003-0001	PACKING	1	1
11	2100700003-0001	COVER,REDUCTION GEARBOX	1	1
12	360300047	BOLT M6×22	5	5
13	360800010	OIL SEAL ϕ25×ϕ41.25×6	1	1
14	360300016	BOLT M8×32	5	5
15	360430010	SCREW M8×25	1	1
16	3412100039-0001	WASHER ϕ20.5×ϕ39×3	1	1
17	1302000020-0000	CRANK SHAFT ASSY	1	
17	1302000048-0000	CRANK SHAFT ASSY		1

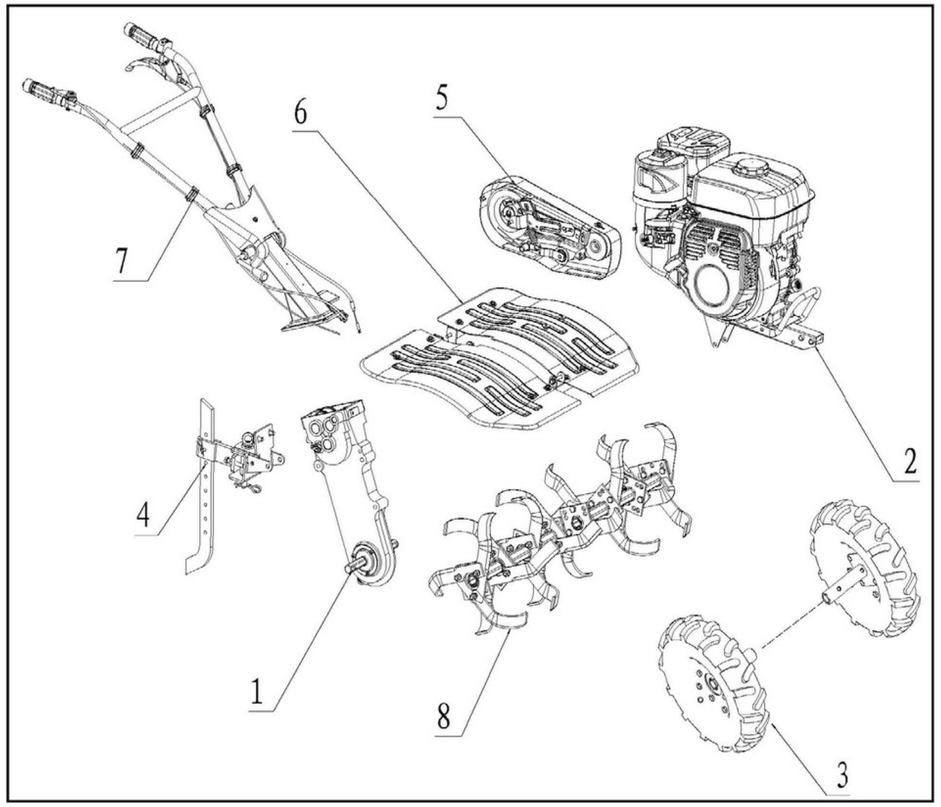

LP	Description
1	Transmission case parts
2	Stent components
3	Walk round parts
4	Connection frame and drag rod components
5	belt cover parts
6	Fender cover parts
7	Armrest control components
8	Rotary parts

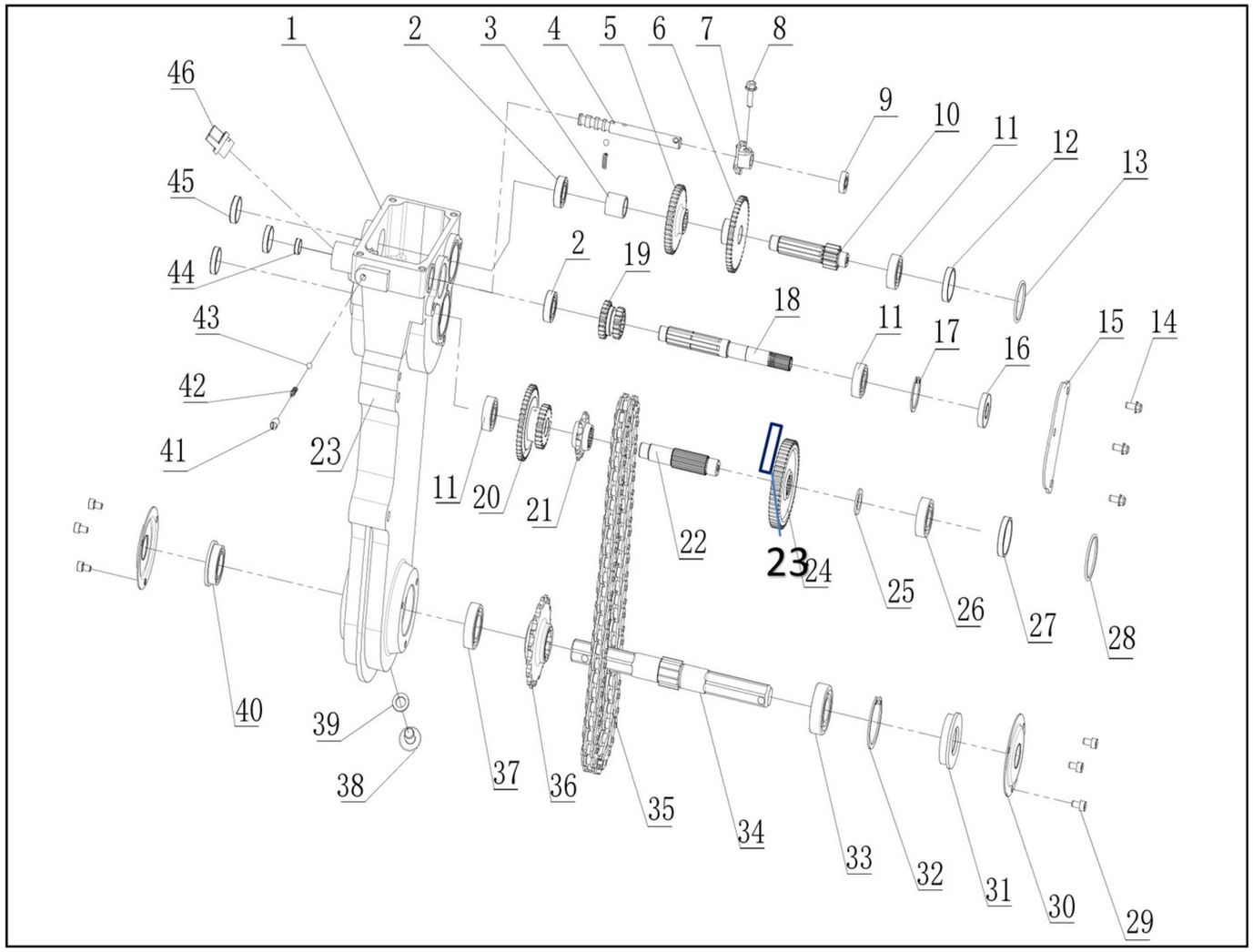

Lp	Kod	Nazwa	Ilość
1	2106000017-0001	Gear Box	1
2	360720001	Bearing 6002	2
3	3410800018-0001	Bush F1	1
4	2103500003-0001	Shift Fork Shaft	1
5	2117200004-0001	The 2nd Driven Gear	1
6	2117300003-0001	The 1st Driven Gear	1

Lp	Kod	Nazwa	Ilość
7	2102900001-0001	Shift Fork	1
8	360300043	Bolt M6×20	1
9	3408800015-0001	Oil Seal 12×22×6	1
10	2119900004-0001	Counter Shaft	1
11	360720019	Bearing 6202	3
12	3410800017-0001	Bush C	1
13	360710025	O-ring40×2.65	1
14	360300005	Hex Bolt M6×12	3
15	2122600001-0001	Oil Stopper	1
16	3408800016-0001	Oil Seal 15×35×7	1
17	360910019	Circlip 35	1
18	2121800002-0001	Main Shaft	1
19	2118100008-0001	Two-throw Gear	1
20	2117800002-0001	Double gear, reverse gear	1
21	2100300001-0001	Driving Sprocket	1
22	2121000001-0001	Driving Sprocket Shaft	1
23	3410800016-0001	Bush I	1
24	2119500002-0001	Driving Gear	1
25	3400100009-0001	Backup Plate17.1×27×1	2
26	360720025	Bearing 6203	1
27	3410800015-0001	Bush D	1
28	360710024	O-ring45×2.65	1
29	360300207	Hex Bolt M6×10	6

Lp	Kod	Nazwa	Ilość
30	2607500005-0001	Cover Board	2
31	3408800017-0001	Oil Seal 25×52×9.5/13	1
32	360910018	Check Ring 52	1
33	360720036	Bearing 6205	1
34	2121400001-0001	Driven Sprocket Shaft	1
35	2100200007-0001	Chain(56 Joints)	1
36	2121500001-0001	Driven Sprocket	1
37	360720011	Bearing 6005	1
38	360290006	Hex Bolt M12×1.5X15	1
39	3412100002-0001	Washer 12×20×2	1
40	3408800018-0001	Oil Seal 25×41×9.5/13	1
41	360400004	Bolt M8×12	1
42	3404800010-0001	Sping	2
43	360970010	Steel Ball SΦ6.35	2
44	3409000002-0001	Oil Plug B	1
45	3409000001-0001	Oil Plug A	3
46	3403400002-0001	Oil Hole Plug	1
47	3400300003-0001	Gear Box gasket	1

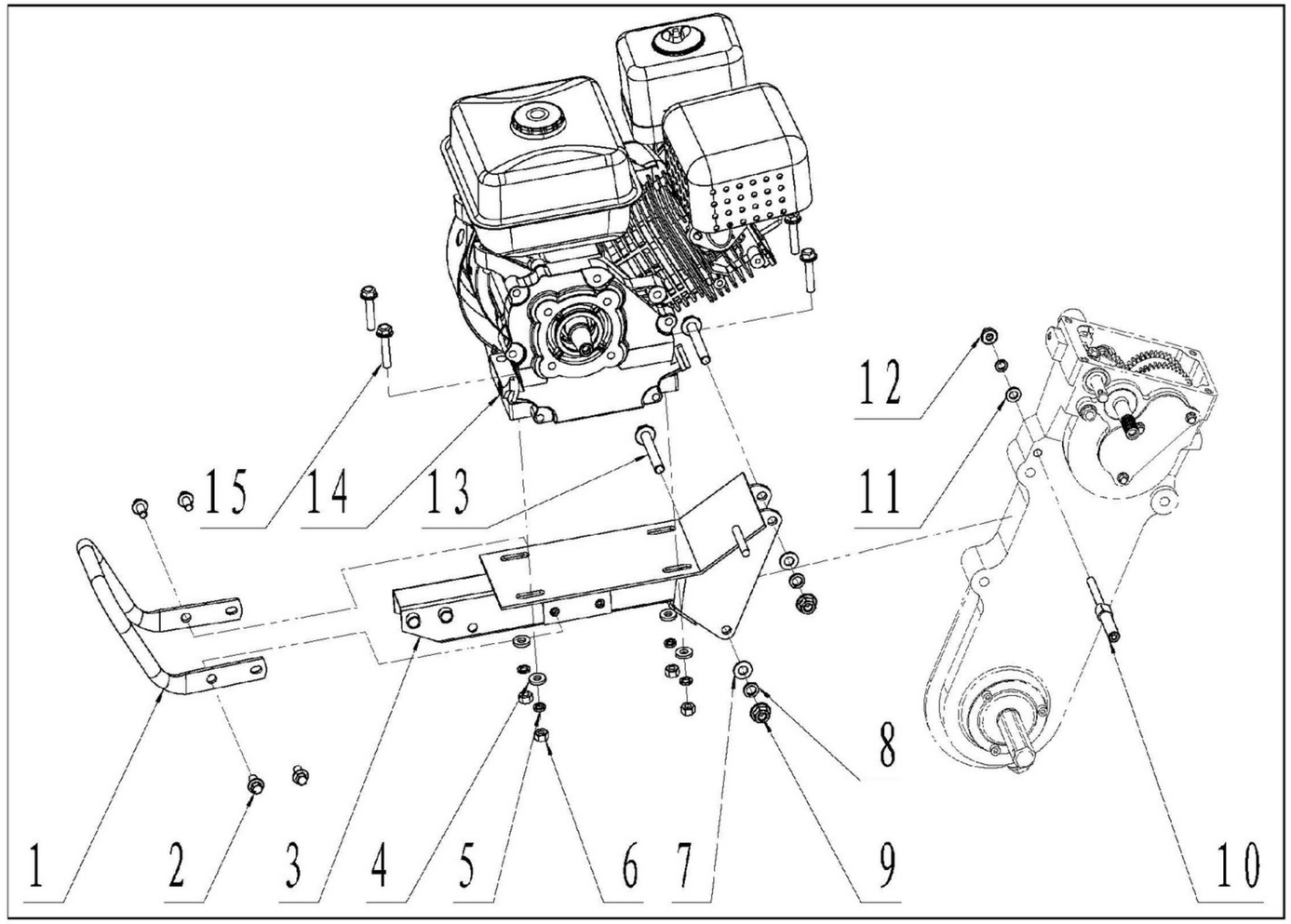

Lp	Kod	Nazwa	Ilość
1	2408600002-0001	Handrail	1
2	360220039	Hex bolts M8×16	4
3	2401200012-0001	Engine Bearer	1
4	3412100045-0002	Washer 8×18×3	4
5	360620008	Spring Washer8	5
6	360010003	Nut M8	4
7	360660013	Washer 10	2
8	360620015	Spring Washer10	2

Lp	Kod	Nazwa	Ilość
9	360040015	Nut M10	2
10	2123500002-0001	Take-up Tumbler Backing Roll	1
11	360660010	Washer 8	1
12	360040009	Hex Nut M8	1
13	360260090	Hex bolts M10×70	2
14	T010210084	Gasoline Engine	1
15	360220043	Hex bolts M8×40	4

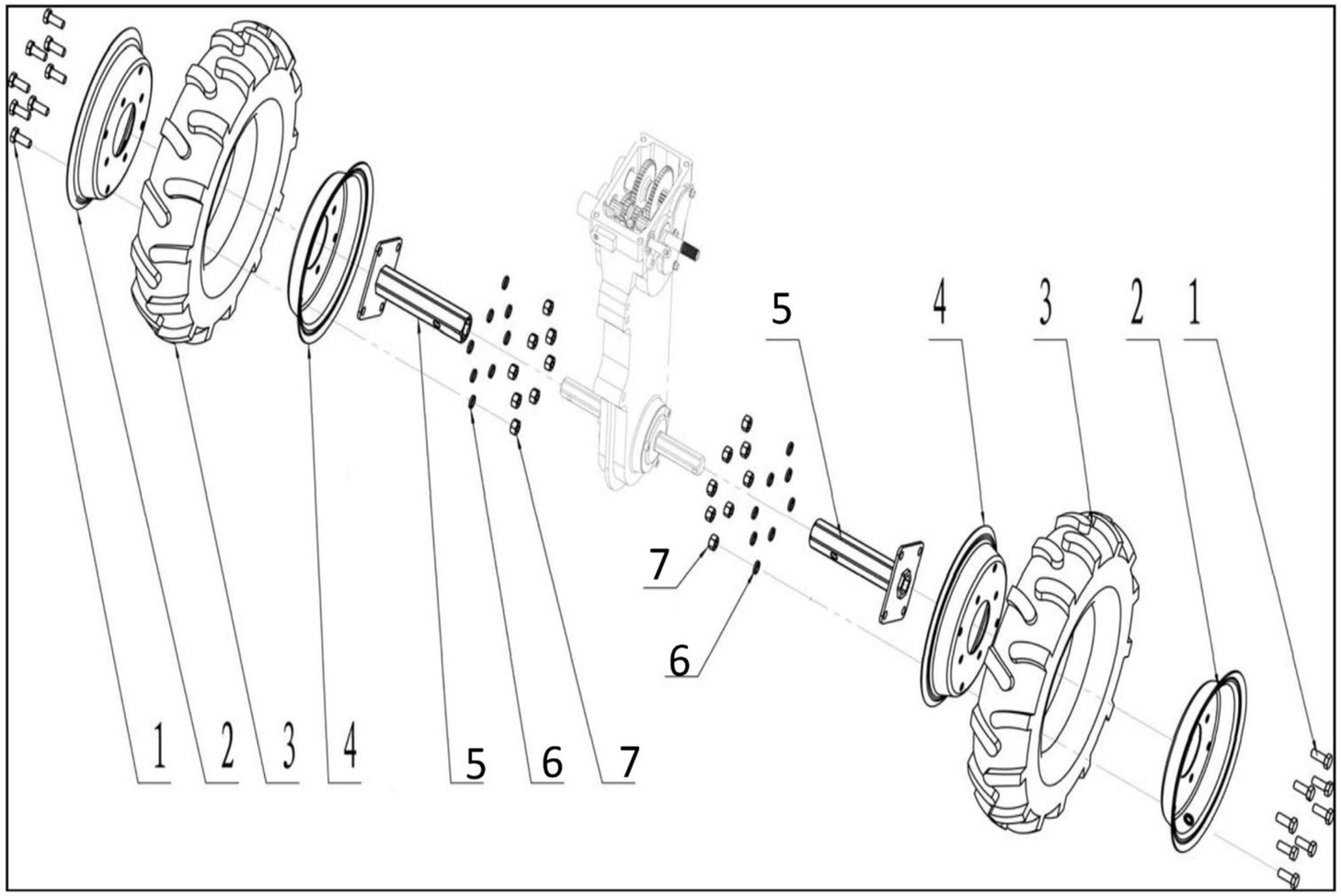

Lp	Kod	Nazwa	Ilość
1	360250034	Bolt M10×25	16
2	2800900001-0005	Spoke（L）	2
3	2800500006-0002	Outer Rubber Tyre 4.00-8	2
4	2800800001-0005	Spoke（R）	2
5	2801000013-0001	4.00-8Wheel axle	2
6	360620015	Spring Washer10	16
7	360010008	Nut M10	16

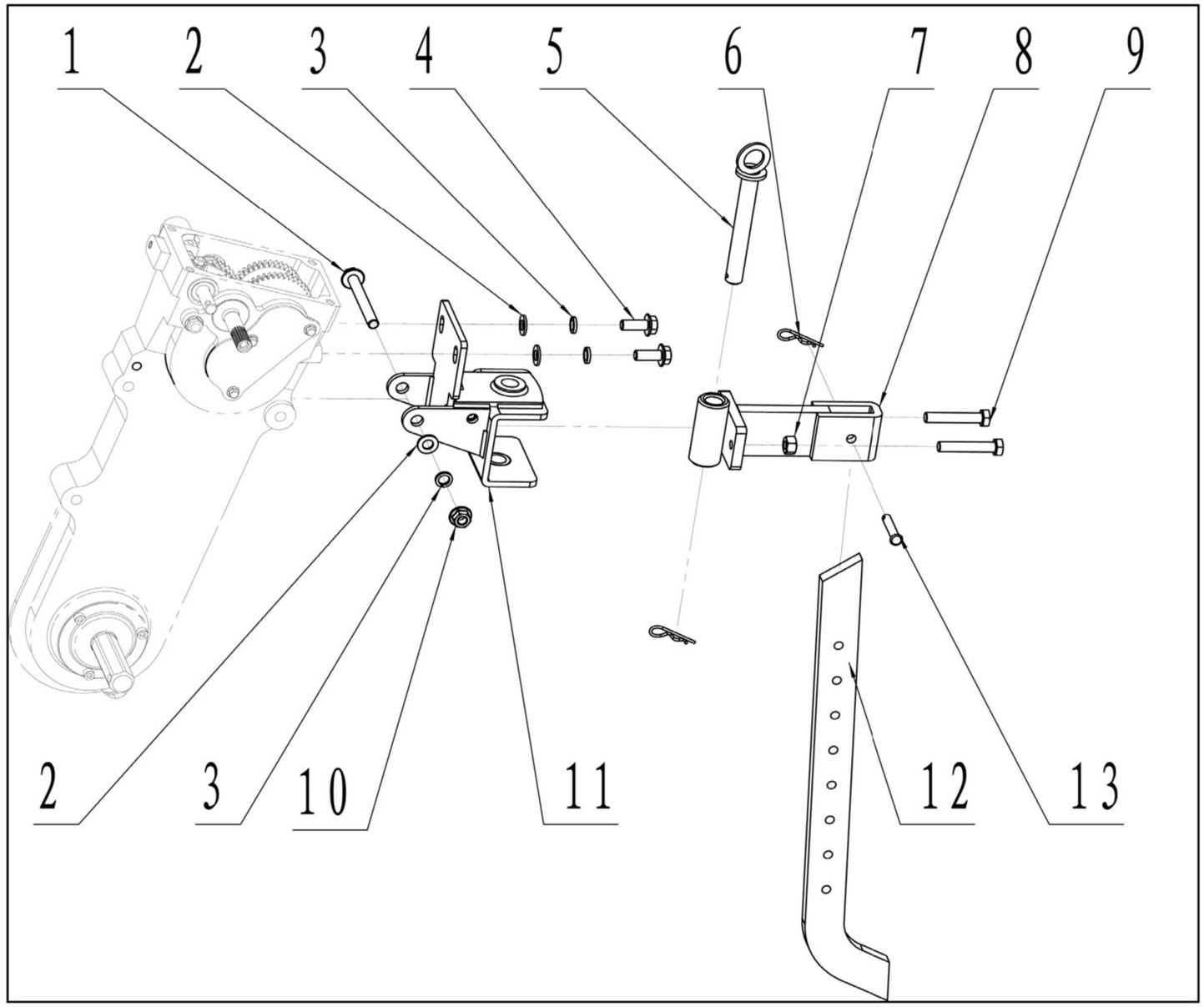
1
2
3
4
5
6
7
8
9
2
3
10
11
12
13

Lp	Kod	Nazwa	Ilość
1	360300204	Hex bolts M10×1.25×90	1
2	360660013	Washer 10	3
3	360620015	Spring Washer10	3
4	360250034	Hex bolts M10×25	2
5	2123400003-0001	Pin Spindle	1
6	3402200004-0002	Clip B	2
7	360010008	Nut M10	2
8	2415400016-0001	Connection frame	1
9	360250129	Hex bolts M10×55	2
10	360050001	Nut M10×1.25	1
11	2425300030-0001	Hinge Comp	1
12	2401300001-0001	Deep Furrowing Resistance part	1
13	361020029	Pin 8×43	1

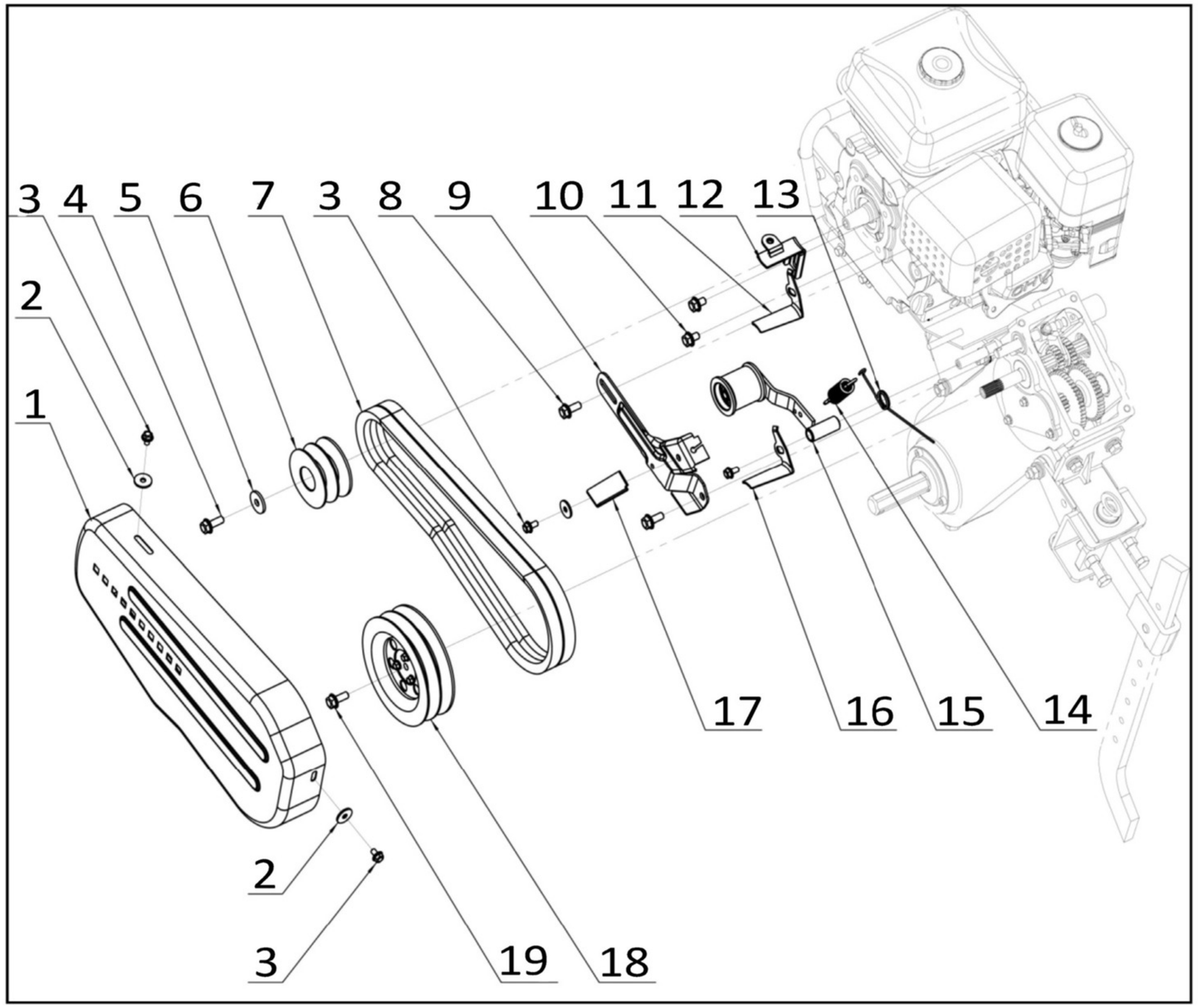
3
4
5
6
7
3
8
9
10
11
12
13
2
1
17
16
15
14
2
3
19
18

Lp	Kod	Nazwa	Ilość
1	2601500002-0001	Belt Protector	1
2	360590001	Washer 6×22×2	3
3	360300005	Hex bolts M6×12	4
4	360220041	Hex bolts M8×25	1
5	360590002	Washer 8	1
6	2106600008-0001	Driving Pulley	1
7	2123600002-0001	V-belt 17×963	2
8	360220039	Hex bolts M8×16	2
9	2404100003-0001	Connecting Plate	1
10	360220038		2
11	2109500002-0001	V-belt Guard C	1
12	2109500001-0001	V-belt Guard B	1
13	3404500003-0001	Torsion_bar Spring	1
14	3404600003-0001	Tensioner Spring	1
15	2110300003-0001	Tensioner Jointing	1
16	2109500003-0001	V-belt Guard A	1
17	2109500004-0001	V-belt Guard D	1
18	2109200002-0002	Drive Pulley Comp	1
19	360220038	Hex bolts M8×20	1

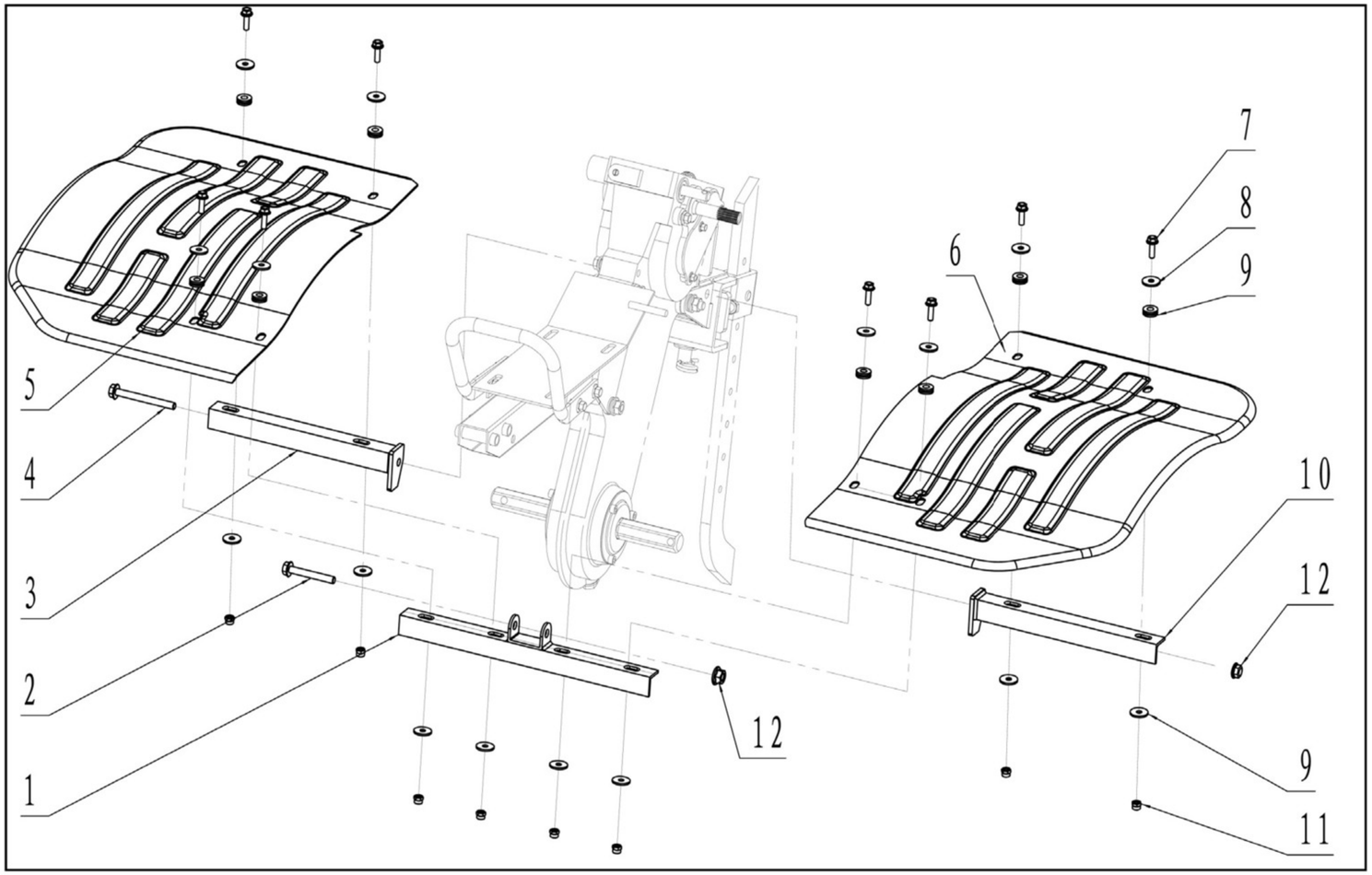
7
8
9
6
5
4
10
3
12
2
12
1
9
11

Lp	Kod	Nazwa	Ilość
1	2605100001-0001	Front Fender Stand Comp	1
2	360300130	Hex bolts M8×60	1
3	2413100005-0001	Rear Fender Stand Comp（R）	1
4	360220158	Hex bolts M8×95	1
5	2601600009-0002	Right Fender	1
6	2601600052-0002	Left Fender	1
7	360300043	Hex bolts M6×20	8
8	360590001	Washer 6×22×2	16
9	2400700001-0001	Rubber Sleeve	8
10	2413100004-0001	Rear Fender Stand Comp（L）	1
11	360120005	Nut M6	8
12	360040009	Nut M8	2

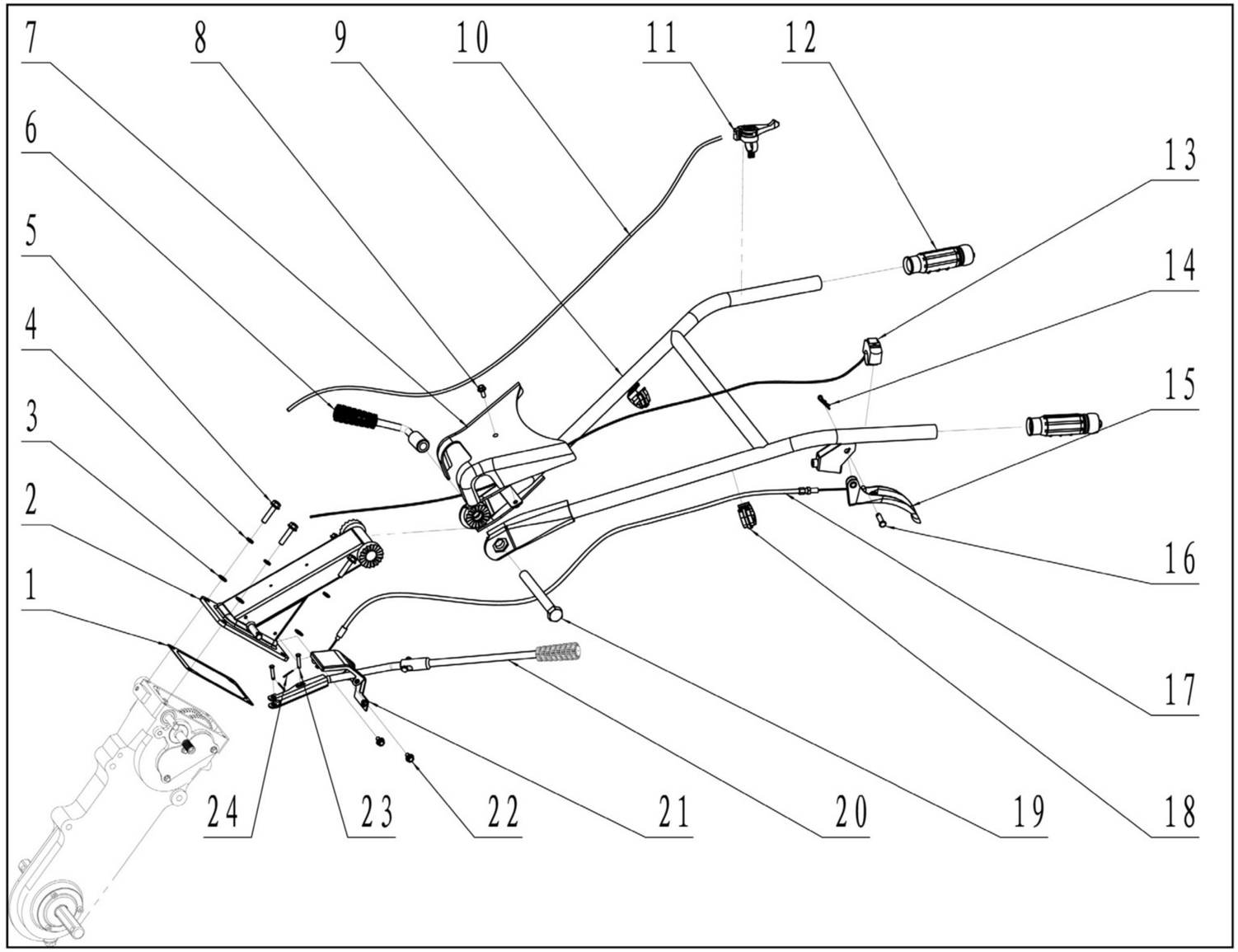
7
8
9
10
11
12
6
13
5
14
4
15
3
2
16
1
17
24
23
22
21
20
19
18

Lp	Kod	Nazwa	Ilość
1	3400300003-0001	Gear Box gasket	1
2	2401400007-0001	Handle Seat Comp	1
3	360660010	Washer 8	4
4	360620008	Spring Washer8	4
5	360220041	Hex Bolt M8×25	4
6	3002100007-0001	High And Low Lock Comp	1
7	2605400003-0001	Handrail Cover Board	1
8	360300007	Hex Bolt M6×16	1
9	2402300028-0001	Handle bar assy	1
10	3000200004-0001	Throttle Cable Comp	1
11	1815700001-0001	Shut Down Swith Comp	1
12	3000500003-0001	Handle Grip	2
13	2210900007-0001	Shut Down Switch Comp	1
14	3402200005-0001	Clip F	1
15	3000900003-0001	Tebsioner Handle	1
16	2153400001-0001	Pin 8×28	1
17	3009200020-0001	Tensioner Cable	1
18	2400600001-0001	clasp	2
19	360260025	Hex Bolt M16×140	1
20	3015600019-0001	Shift Lever	1
21	2407900004-0001	Gear Position Indication Stand	1
22	360300207	Hex Bolt M6×12	2
23	361020003	Pin 5×25	2
24	360560013	Splitpin 1.5×20	2

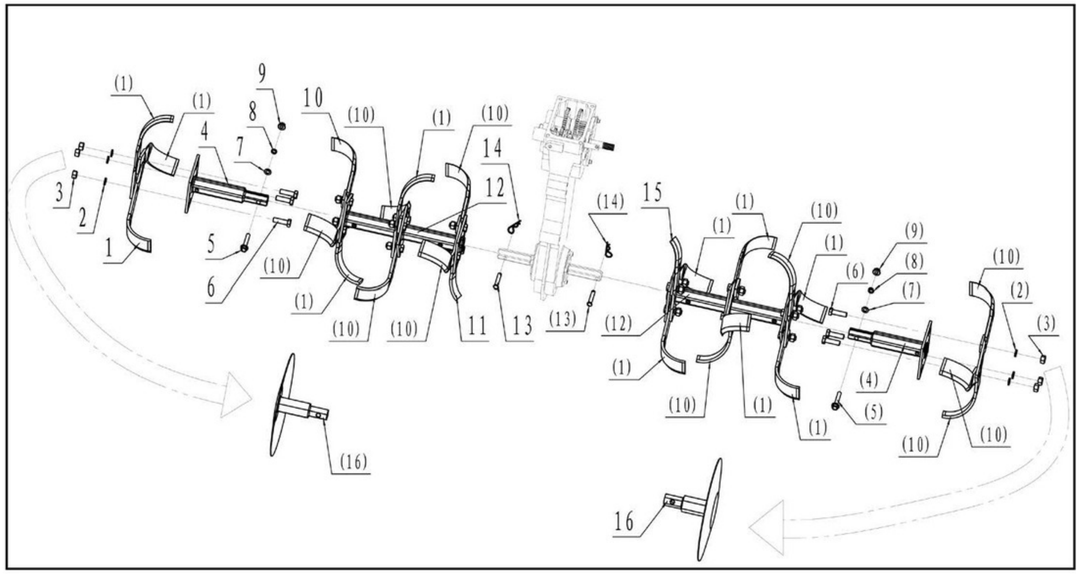

Lp	Kod	Nazwa	Ilość
1	2700400003-0001	Left Rotary Blade	11
2	360620015	Spring Washer10	24
3	360010008	Nut M10	24
4	2708000005-0001	Subsiduary Blade Holder Comp	2
5	360220163	Hex Bolt M8×45	2
6	360250070	Hex Bolt M10×35	24
7	360660010	Washer 8	2
8	360620008	Spring Washer8	2
9	360040009	Hex Nut M8	2
10	2700400004-0001	Right Rotary Blade	11
11	2700400005-0001	Left short Rotary Blade	1
12	2706600021-0001	Primary Blade Holder Comp	2
13	361020029	Pin 8×43	2
14	3402200004-0002	Clip B	2
15	2700400006-0001	Right short Rotary Blade	1
16	2705300006-0001	Circinal Cover	2